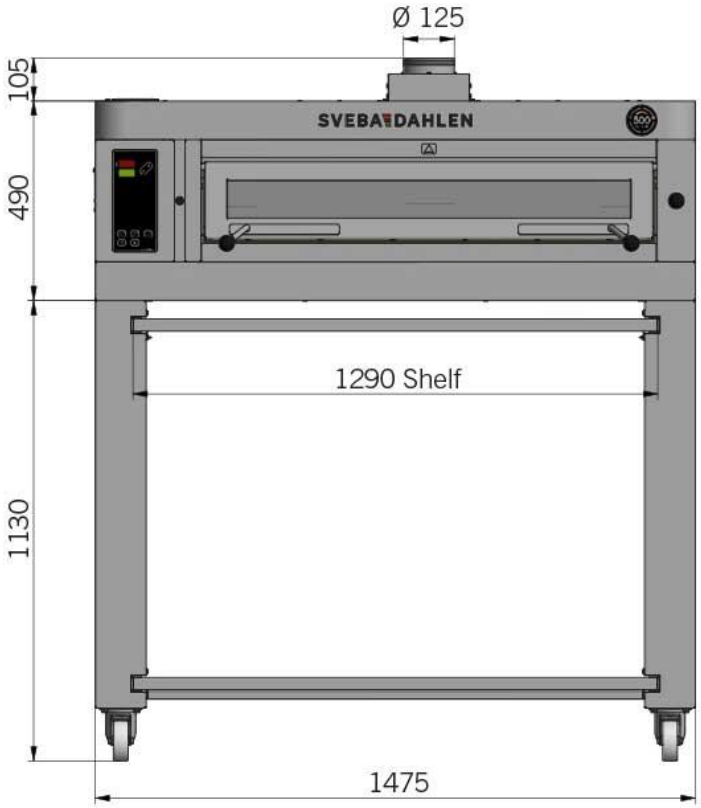
Ø 125
105
490
1130
SVEBA DAHLEN
1290 Shelf
1475

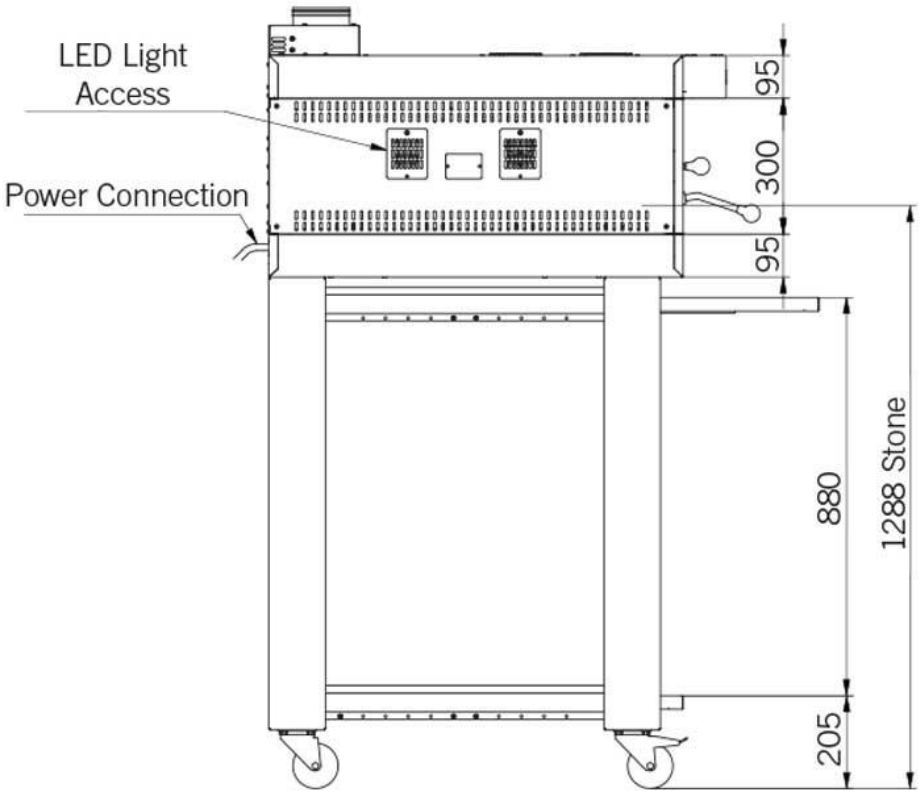
LED Light
Access
Power Connection
95
300
95
880
1288 Stone
205

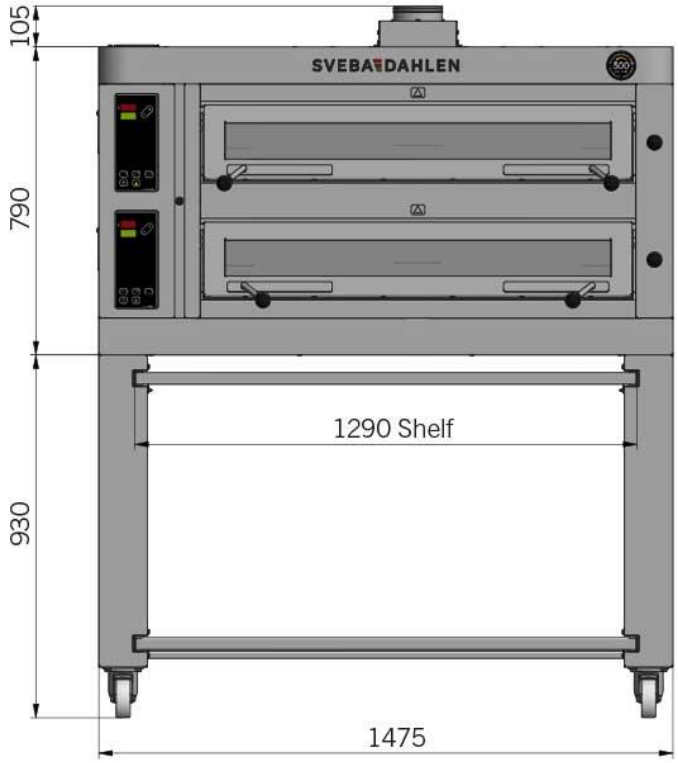
105
790
930
SVEBA DAHLEN
1290 Shelf
1475

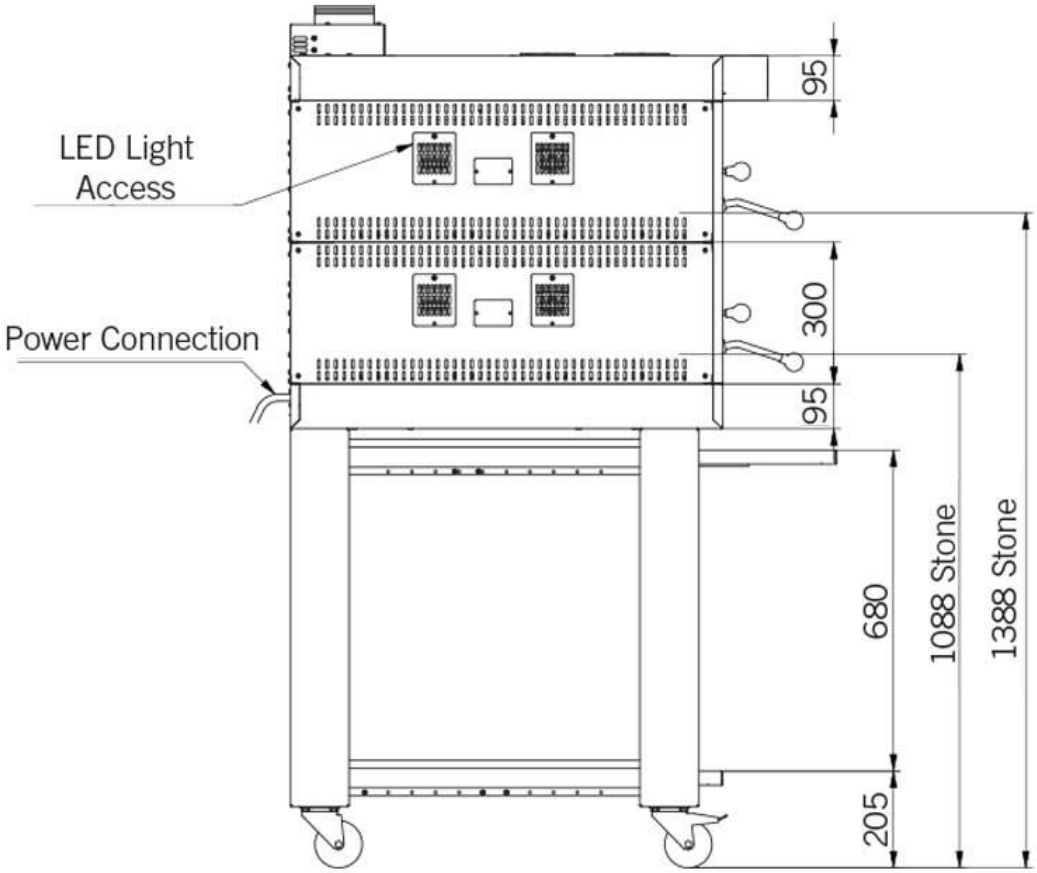
LED Light
Access
Power Connection
95
300
95
680
205
1088 Stone
1388 Stone

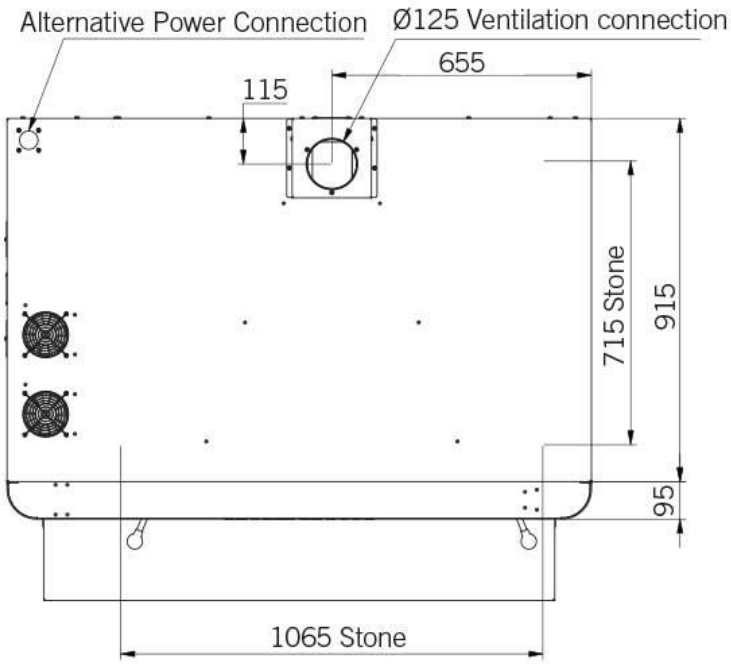
Alternative Power Connection
Ø125 Ventilation connection
655
115
715 Stone
915
95
1065 Stone

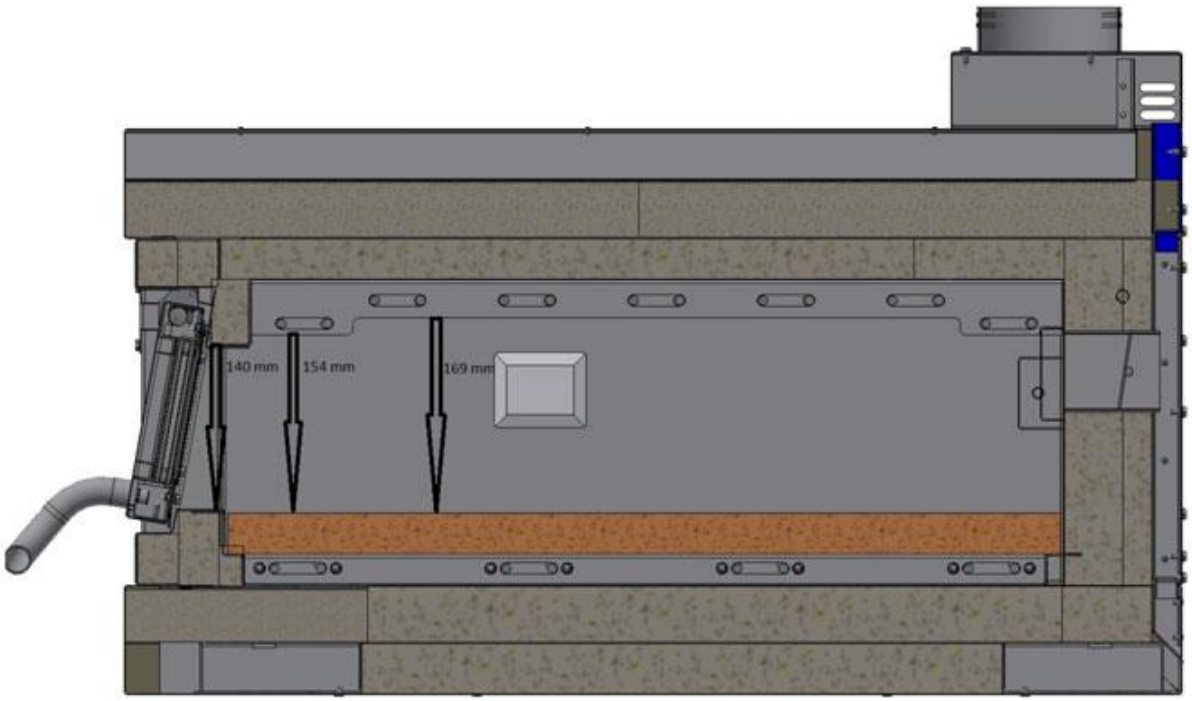
140 mm
154 mm
169 mm